Constructo 202 (2 streams for waste separation)

Article number: 10001248

Series: Constructo

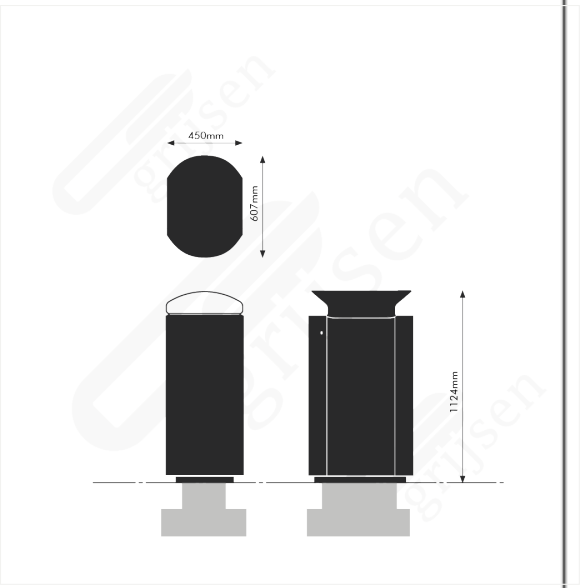

Product description

The **Constructo 202 waste bin (two fractions)** has throw-in openings for one fraction each on both sides. The Constructo 202 with two fractions has a capacity of 2x 90 liters. The Constructo 202 is **fully modular** and therefore has a nice **circular base**. This bin is equipped with two plastic bag holders. This bin also has the advantages of the Constructo II series. The waste bins are optionally supplied with a sticker set for on the door panel of the waste bin. On the panel, there is a recess where the sticker can be stuck on. The sticker indicates which waste stream belongs in the fraction. The Constructo 202 waste bin is also available with a single fraction that allows for the unsorted collection of waste.

Extra information

Material frame:

Steel, 4 mm, hot-dip galvanized and two-layer powder coated 120 µm, in RAL colour of your choice

Materiaal panels|

Steel, 2.5 mm, marquise-pattern plate, hot-dip galvanized and two-layer powder coated 120 µm, in RAL colour of your choice

Materiaal inner box

Plastic bag holder

Optional

The bin can be supplied with:

- Ashtray on frame

© Copyright Grijsen international

- Logo
- External plastic bag holder
- Stickers for waste separation (See the download for file specifications)

Capacity
180 liter (2x 90L)

Including concrete base?
The bin comes with concrete base

Including fireworks cover?
Yes, bottom plate is also a fireworks cover

Weight excl. concrete base
80 kilogram

View all Grijsen street furniture

Grijsen International | Lorentzstraat 13 | 7102 JH Winterswijk, The Netherlands
© Copyright Grijsen international
T: +31 (0)543 51 69 50 | E: info@grijsen-international.com | W: www.grijsen-international.com